| RR210 | .. | i |
|---|---|---|

| | i | $T_2$ [Nm] | | | | | | $n_{1max}$ | $T_{2max}$ | $P_t$ |
|---|---|---|---|---|---|---|---|---|---|---|
| | | $n_2$ x h | | | | | | | | |
| | 1/… | **10000** ($10^4$) | **25000** ($2.5 \cdot 10^4$) | **50000** ($5 \cdot 10^4$) | **100000** ($10^5$) | **500000** ($5 \cdot 10^5$) | **1000000** ($10^6$) | [$min^{-1}$] | [Nm] | [kW] |
| **RR210** | **3.31** | 2500 | 2360 | 2330 | 2180 | 1610 | 1310 | 3500 | 2500 (M.../FS) 3300 (S...) | 14.8 (M...) 27 (S...) 20.8 (UC) 9.9 (FS) |
| | **3.91** | 2480 | 2300 | 2110 | 1860 | 1580 | 1290 | | | |
| | **4.94** | 2210 | 1860 | 1630 | 1490 | 1350 | 1250 | | | |
| | **5.78** | 2030 | 1710 | 1500 | 1410 | 1270 | 1220 | | | |
| | **7.09** | 1390 | 1160 | 1030 | 990 | 890 | 860 | | | |
| **RR210D** | **10.96** | 2500 | 2360 | 2330 | 2180 | 1610 | 1310 | 3500 | 2500 (M.../FS) 3300 (S...) | 8 (M...) 14.2 (S...) 11.1 (UC) 5.9 (FS) |
| | **12.94** | 2500 | 2360 | 2330 | 2180 | 1610 | 1310 | | | |
| | **15.29** | 2480 | 2300 | 2110 | 1860 | 1580 | 1290 | | | |
| | **19.32** | 2480 | 2300 | 2110 | 1860 | 1580 | 1290 | | | |
| | **22.6** | 2480 | 2300 | 2110 | 1860 | 1580 | 1290 | | | |
| | **28.55** | 2210 | 1860 | 1630 | 1490 | 1350 | 1250 | | | |
| | **35.02** | 2210 | 1860 | 1630 | 1490 | 1350 | 1250 | | | |
| | **40.98** | 2030 | 1710 | 1500 | 1410 | 1270 | 1220 | | | |
| | **50.27** | 1390 | 1160 | 1030 | 990 | 890 | 860 | | | |
| **RR210T** | **60.18** | 2500 | 2360 | 2330 | 2180 | 1610 | 1310 | 3500 | 2500 (M.../FS) 3300 (S...) | 5.8 (M...) 10 (S...) 7.9 (UC) 4.4 (FS) |
| | **71.09** | 2480 | 2300 | 2110 | 1860 | 1580 | 1290 | | | |
| | **80.37** | 2500 | 2360 | 2330 | 2180 | 1610 | 1310 | | | |
| | **89.82** | 2480 | 2300 | 2110 | 1860 | 1580 | 1290 | | | |
| | **105.09** | 2480 | 2300 | 2110 | 1860 | 1580 | 1290 | | | |
| | **119.95** | 2480 | 2300 | 2110 | 1860 | 1580 | 1290 | | | |
| | **140.34** | 2480 | 2300 | 2110 | 1860 | 1580 | 1290 | | | |
| | **177.32** | 2210 | 1860 | 1630 | 1490 | 1350 | 1250 | | | |
| | **217.5** | 2210 | 1860 | 1630 | 1490 | 1350 | 1250 | | | |
| | **254.49** | 2030 | 1710 | 1500 | 1410 | 1270 | 1220 | | | |
| | **312.16** | 1390 | 1160 | 1030 | 990 | 890 | 860 | | | |
| **RR210Q** | **279.84** | 2500 | 2360 | 2330 | 2180 | 1610 | 1310 | 3500 | 2500 (M.../FS) 3300 (S...) | 4.8 (M...) 7.9 (S...) 6.3 (UC) 3.7 (FS) |
| | **330.57** | 2480 | 2300 | 2110 | 1860 | 1580 | 1290 | | | |
| | **417.65** | 2480 | 2300 | 2110 | 1860 | 1580 | 1290 | | | |
| | **488.66** | 2480 | 2300 | 2110 | 1860 | 1580 | 1290 | | | |
| | **557.76** | 2480 | 2300 | 2110 | 1860 | 1580 | 1290 | | | |
| | **652.6** | 2480 | 2300 | 2110 | 1860 | 1580 | 1290 | | | |
| | **824.52** | 2210 | 1860 | 1630 | 1490 | 1350 | 1250 | | | |
| | **871.54** | 2480 | 2300 | 2110 | 1860 | 1580 | 1290 | | | |
| | **1011.39** | 2210 | 1860 | 1630 | 1490 | 1350 | 1250 | | | |
| | **1183.36** | 2030 | 1710 | 1500 | 1410 | 1270 | 1220 | | | |
| | **1350.69** | 2210 | 1860 | 1630 | 1490 | 1350 | 1250 | | | |
| | **1580.36** | 2030 | 1710 | 1500 | 1410 | 1270 | 1220 | | | |
| | **1938.54** | 1390 | 1160 | 1030 | 990 | 890 | 860 | | | |

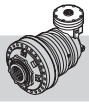

| RA210 | .. | i |
|---|---|---|

| | i | $T_2$ [Nm] | | | | | | $n_{1max}$ | $T_{2max}$ | $P_t$ |
|---|---|---|---|---|---|---|---|---|---|---|
| | | $n_2$ x h | | | | | | | | |
| | 1/… | **10000** ($10^4$) | **25000** ($2.5 \cdot 10^4$) | **50000** ($5 \cdot 10^4$) | **100000** ($10^5$) | **500000** ($5 \cdot 10^5$) | **1000000** ($10^6$) | [$min^{-1}$] | [Nm] | [kW] |
| **RA210** | **10.66** | 1980 | 1660 | 1460 | 1310 | 1170 | 1010 | 3500 | 2500 (M.../FS) 3300 (S...) | 14 (M...) 20.1 (S...) 17 (UC) 11.4 (FS) |
| | **12.59** | 2270 | 1900 | 1670 | 1530 | 1360 | 1130 | | | |
| | **15.91** | 2210 | 1860 | 1630 | 1490 | 1350 | 1250 | | | |
| | **18.61** | 2030 | 1710 | 1500 | 1410 | 1270 | 1220 | | | |
| | **22.83** | 1390 | 1160 | 1030 | 990 | 890 | 860 | | | |
| | **29.09** | 1000 | 830 | 770 | 730 | 640 | 600 | | | |
| | **34.03** | 1140 | 940 | 890 | 840 | 740 | 700 | | | |
| | **41.75** | 1340 | 1130 | 1030 | 990 | 890 | 840 | | | |
| **RA210D** | **35.28** | 2500 | 2360 | 2330 | 2180 | 1610 | 1310 | 3500 | 2500 (M.../FS) 3300 (S...) | 9.8 (M...) 13.9 (S...) 11.9 (UC) 8.1 (FS) |
| | **41.67** | 2500 | 2360 | 2330 | 2180 | 1610 | 1310 | | | |
| | **49.23** | 2480 | 2300 | 2110 | 1860 | 1580 | 1290 | | | |
| | **62.20** | 2480 | 2300 | 2110 | 1860 | 1580 | 1290 | | | |
| | **72.77** | 2480 | 2300 | 2110 | 1860 | 1580 | 1290 | | | |
| | **91.94** | 2210 | 1860 | 1630 | 1490 | 1350 | 1250 | | | |
| | **112.78** | 2210 | 1860 | 1630 | 1490 | 1350 | 1250 | | | |
| | **131.96** | 2030 | 1710 | 1500 | 1410 | 1270 | 1220 | | | |
| | **161.86** | 1390 | 1160 | 1030 | 990 | 890 | 860 | | | |
| | **196.71** | 2030 | 1710 | 1500 | 1410 | 1270 | 1220 | | | |
| | **206.22** | 2210 | 1860 | 1630 | 1490 | 1350 | 1250 | | | |
| | **241.29** | 2030 | 1710 | 1500 | 1410 | 1270 | 1220 | | | |
| | **295.98** | 1390 | 1160 | 1030 | 990 | 890 | 860 | | | |

RR210 | .. | i | ..

—

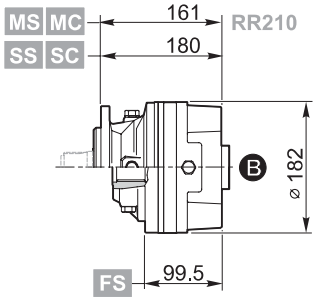
MS MC
SS SC
161
180
RR210
B
ø 182
FS
99.5

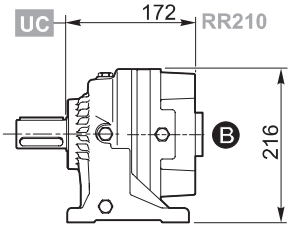
UC
172
RR210
B
216

D

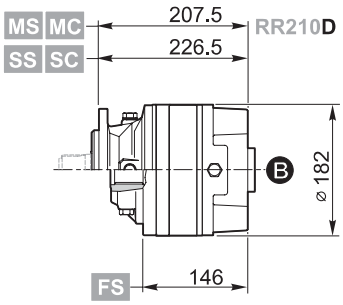
MS MC
SS SC
207.5
226.5
RR210D
B
ø 182
FS
146

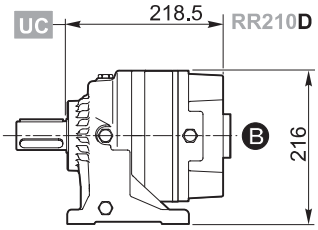
UC
218.5
RR210D
B
216

T

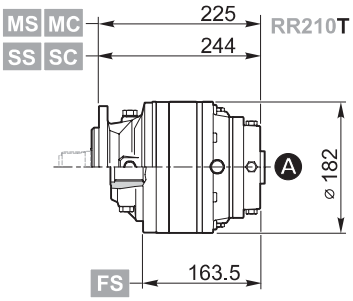
MS MC
SS SC
225
244
RR210T
A
ø 182
FS
163.5

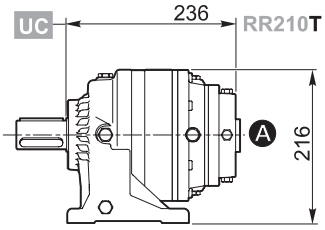
UC
236
RR210T
A
216

Q

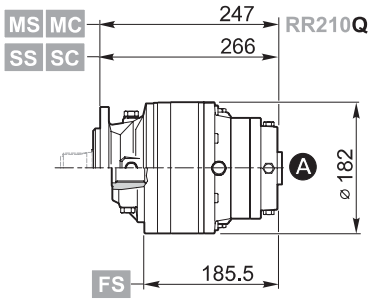
MS MC
SS SC
247
266
RR210Q
A
ø 182
FS
185.5

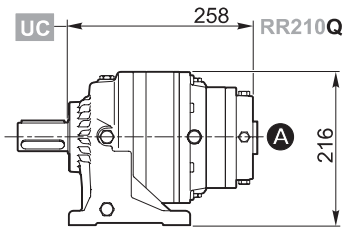
UC
258
RR210Q
A
216

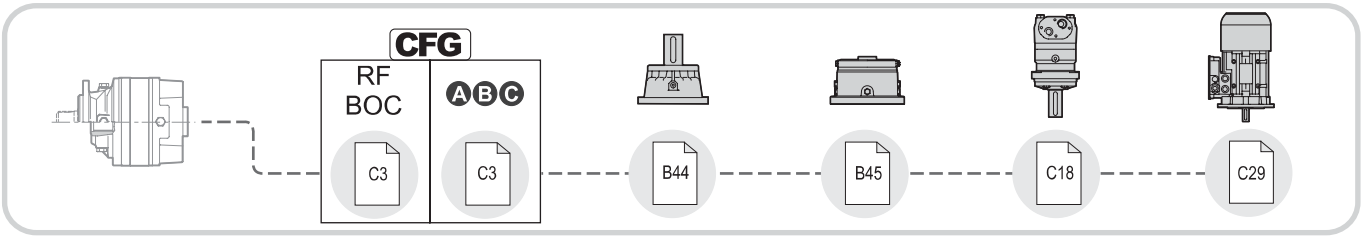
CFG
RF
BOC
ABC
C3
C3
B44
B45
C18
C29

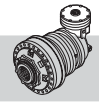

| RA210 | .. | i | .. |
|---|---|---|---|

—

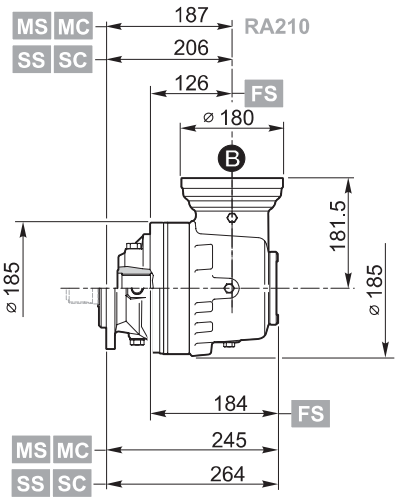
MS MC
SS SC
187
206
RA210
126
FS
⌀ 180
B
181.5
⌀ 185
⌀ 185
184
FS
MS MC
SS SC
245
264

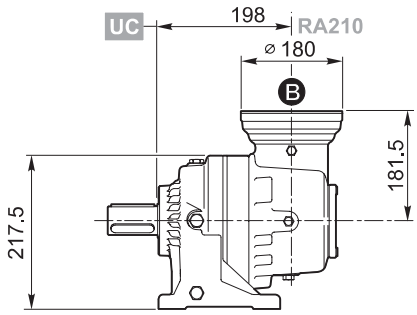
UC
198
RA210
⌀ 180
B
181.5
217.5

D

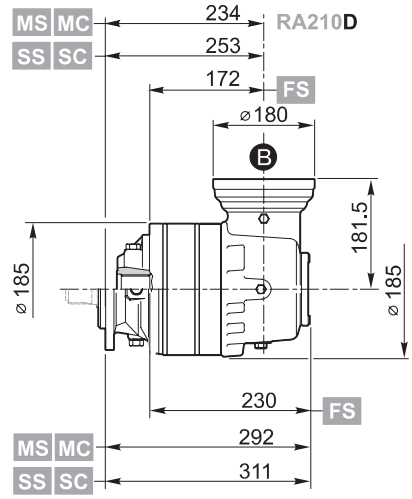
MS MC
SS SC
234
253
RA210D
172
FS
⌀180
B
181.5
⌀ 185
⌀ 185
230
FS
MS MC
SS SC
292
311

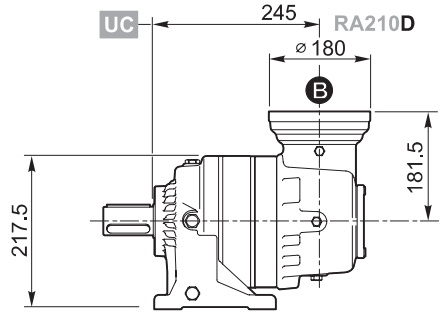
UC
245
RA210D
⌀ 180
B
181.5
217.5

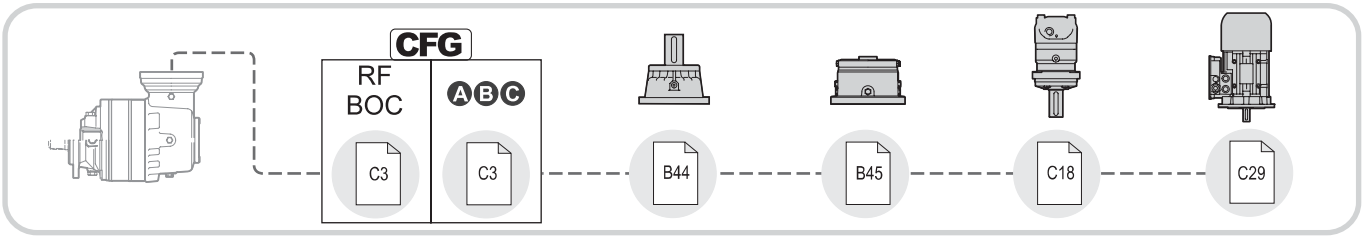
CFG
RF
BOC
ABC
C3
C3
B44
B45
C18
C29

| RR210<br>RA210 | .. | i | .. |
|---|---|---|---|

MS
MC

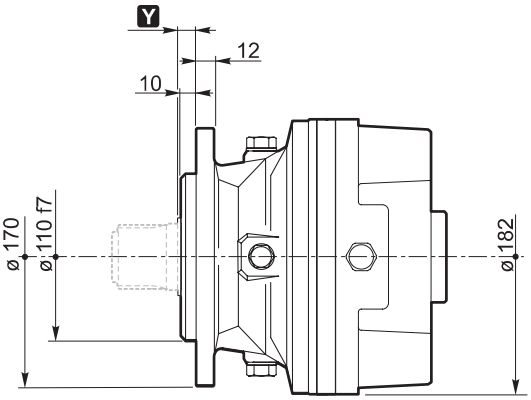


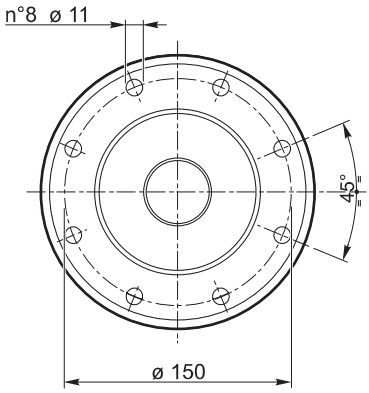


SS
SC

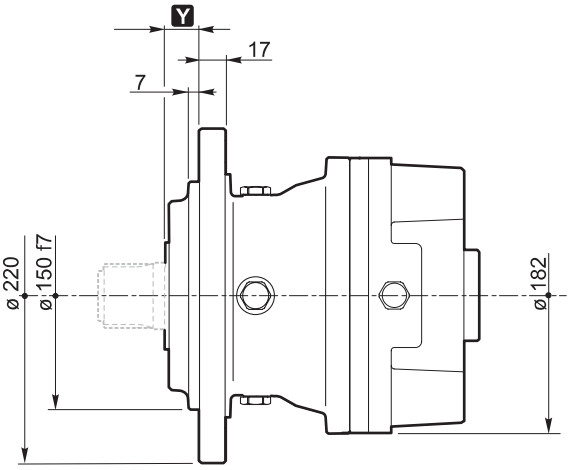


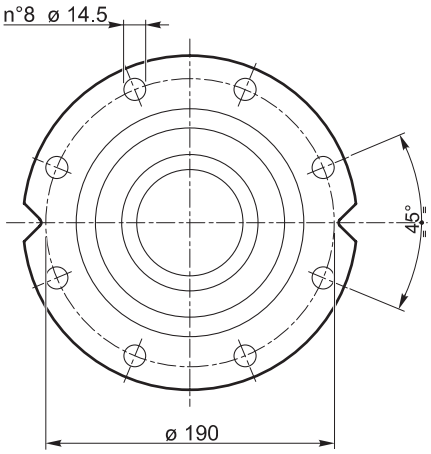


UC

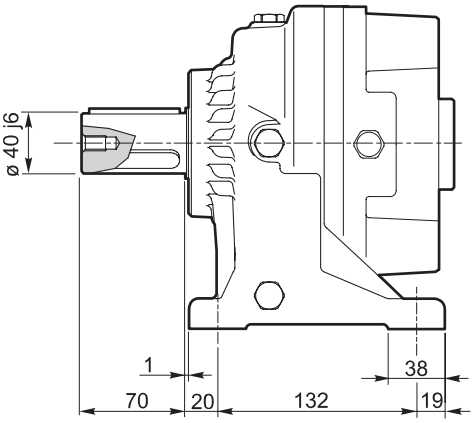


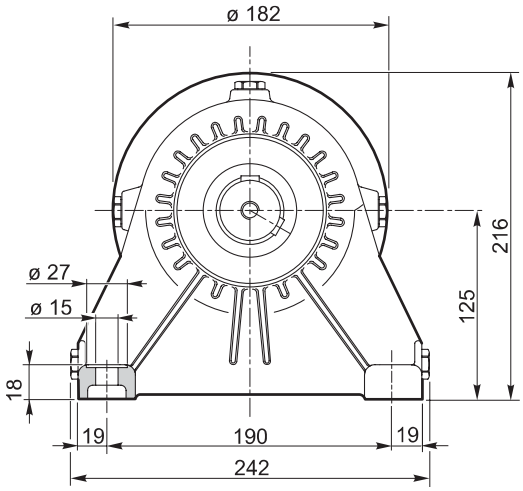

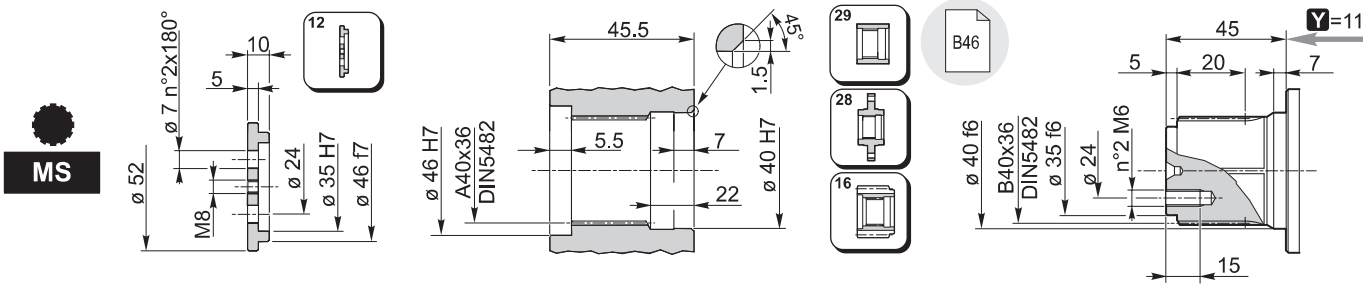
MS
ø 7 n°2x180°
10
5
12
ø 52
M8
ø 24
ø 35 H7
ø 46 f7
45.5
45°
1.5
ø 46 H7
A40x36
DIN5482
5.5
7
22
ø 40 H7
29
28
16
B46
45
Y=11
5
20
7
ø 40 f6
B40x36
DIN5482
ø 35 f6
ø 24
n°2 M6
15

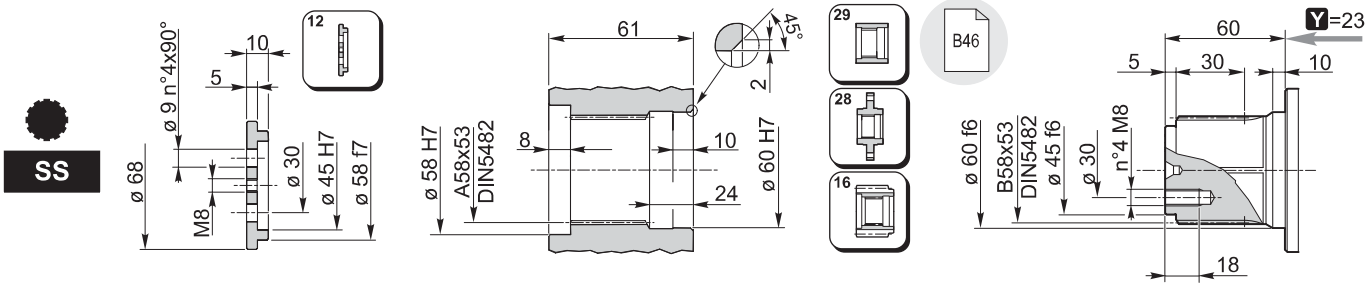
SS
ø 9 n°4x90°
10
5
12
ø 68
M8
ø 30
ø 45 H7
ø 58 f7
61
45°
2
ø 58 H7
A58x53
DIN5482
8
10
24
ø 60 H7
29
28
16
B46
60
Y=23
5
30
10
ø 60 f6
B58x53
DIN5482
ø 45 f6
ø 30
n°4 M8
18

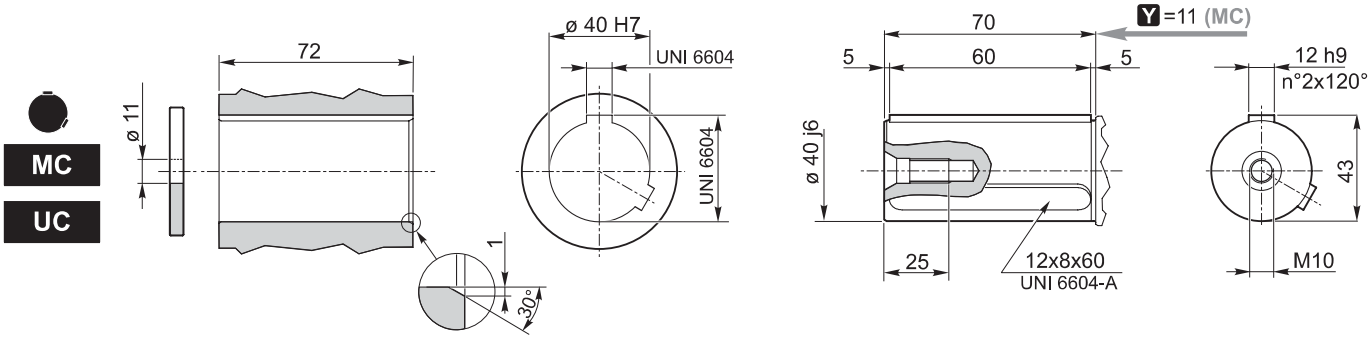
MC
UC
ø 11
72
ø 40 H7
UNI 6604
UNI 6604
1
30°
70
Y=11 (MC)
5
60
5
ø 40 j6
25
12x8x60
UNI 6604-A
12 h9
n°2x120°
43
M10

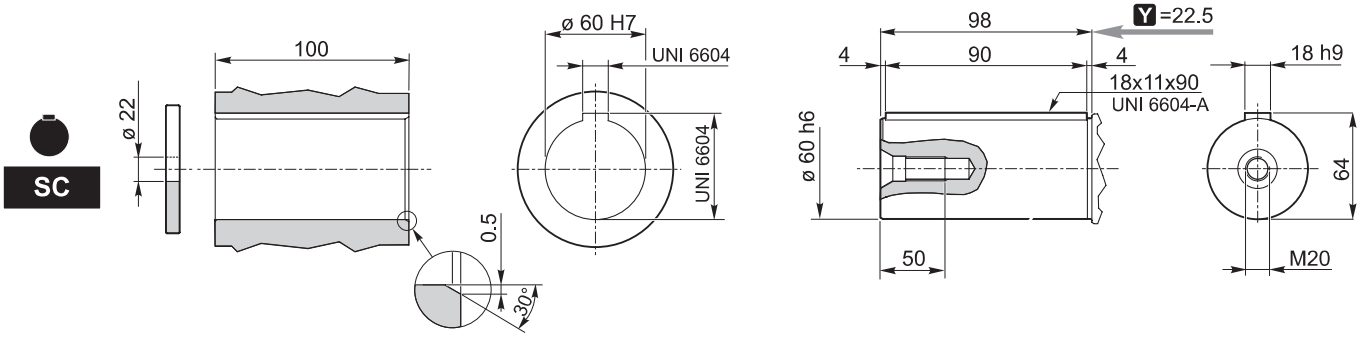
SC
ø 22
100
ø 60 H7
UNI 6604
UNI 6604
0.5
30°
98
Y=22.5
4
90
4
18x11x90
UNI 6604-A
ø 60 h6
50
18 h9
64
M20

| RR210<br>RA210 | .. | i | FS |
|---|---|---|---|

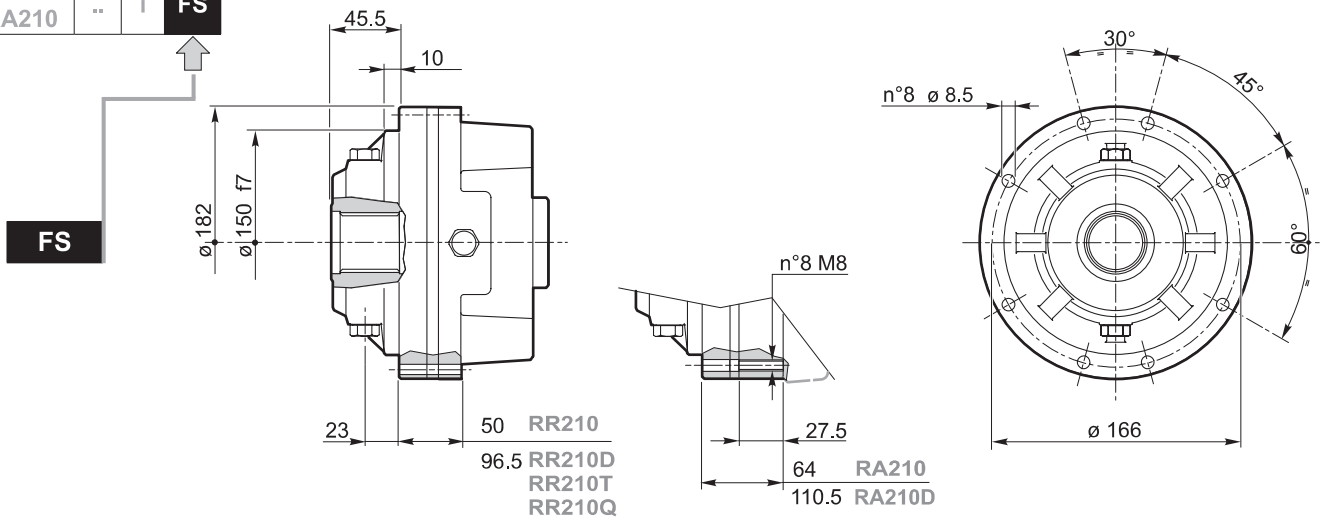


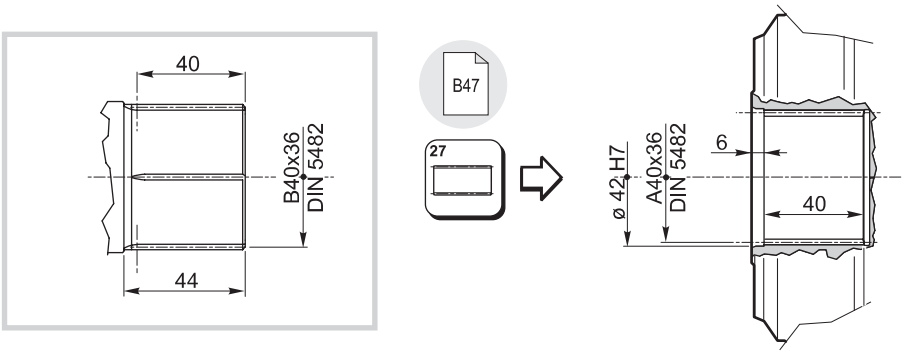


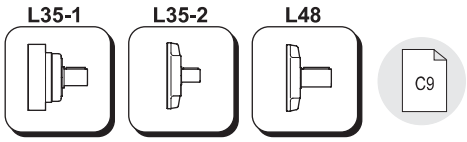


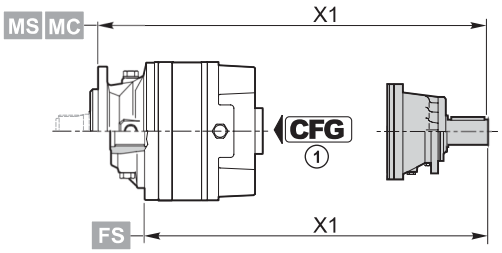


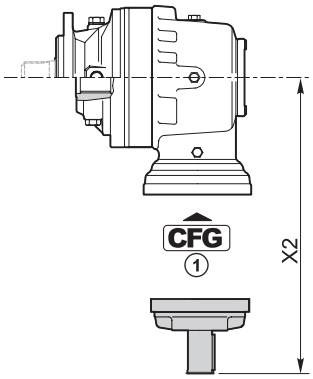


| CFG | |
|---|---|
| RF<br>BOC | C3 |
| A<br>B<br>C | C3 |

| | CFG 1 | | code | X1 |
|---|---|---|---|---|
| **RR210** | BOC | **L48** | 154B3989M1 | 282.5 (M...)<br>221 (FS)<br>301.5 (S...) |
| **RR210D** | BOC | **L35-2** | 154-2190M1 | 297 (M...)<br>235.5 (FS)<br>316.5 (S...) |
| **RR210T** | RF | **L35-1** | 154B4054 | 313 (M...)<br>251.5 (FS)<br>332 (S...) |
| **RR210Q** | RF | **L35-1** | 154B4054M1 | 335 (M...)<br>273.5 (FS)<br>354 (S...) |

| | CFG 1 | | code | X2 |
|---|---|---|---|---|
| **RA210** | BOC | **L35-2** | 154-2190M1 | 270.5 |
| **RA210D** | BOC | **L35-2** | 154-2190M1 | 270.5 |

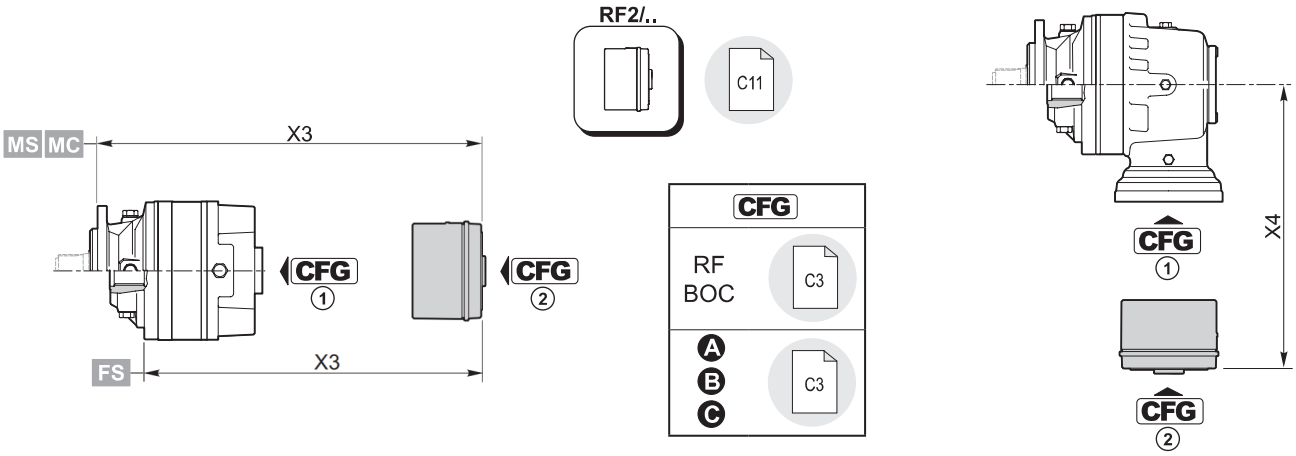


| RF2/.. | CFG 1 | $T_f$ [Nm] | CFG 2 | | | | | | |
|---|---|---|---|---|---|---|---|---|---|
| | | | B | | OMP/OMR SAE A 2B Ø 25 | OMP/OMR SAE A 2B 1" 6B | OMP/OMR SAE A 4B Ø 25 | OMP/OMR SAE A 4B 1" 6B | |
| | | | code | X3 | code | code | code | code | X3 |
| RR210 | RF | 70 | 154-2838M1 | 199.5 (M...)<br>138 (FS)<br>218.5 (S...) | 154-2863 | 154-2863M11 | 154-2635 | 154-2635M11 | 189.5 (M...)<br>128 (FS)<br>208.5 (S...) |
| | | 140 | 154-2839M1 | | 154-2864 | 154-2864M11 | 154-2636 | 154-2636M11 | |
| | | 210 | 154-2840M1 | | 154-2865 | 154-2865M11 | 154-2637 | 154-2637M11 | |
| | | 320 | 154-2841M1 | | 154-2866 | 154-2866M11 | 154-2638 | 154-2638M11 | |
| | | 430 | 154-2842M1 | | 154-2867 | 154-2867M11 | 154-2639 | 154-2639M11 | |
| | | 600 | 154B8962M1 | | 154B9665 | 154B9665M11 | 154B9666 | 154B9666M11 | |
| RR210D | RF | 70 | 154-2838M1 | 246 (M...)<br>184.5 (FS)<br>265 (S...) | 154-2863 | 154-2863M11 | 154-2635 | 154-2635M11 | 236 (M...)<br>174.5 (FS)<br>255 (S...) |
| | | 140 | 154-2839M1 | | 154-2864 | 154-2864M11 | 154-2636 | 154-2636M11 | |
| | | 210 | 154-2840M1 | | 154-2865 | 154-2865M11 | 154-2637 | 154-2637M11 | |
| | | 320 | 154-2841M1 | | 154-2866 | 154-2866M11 | 154-2638 | 154-2638M11 | |
| | | 430 | 154-2842M1 | | 154-2867 | 154-2867M11 | 154-2639 | 154-2639M11 | |
| | | 600 | 154B8962M1 | | 154B9665 | 154B9665M11 | 154B9666 | 154B9666M11 | |

| | CFG 1 | $T_f$ [Nm] | CFG 2 | | | | | | |
|---|---|---|---|---|---|---|---|---|---|
| | | | A | | OMP/OMR SAE A 2B Ø 25 | OMP/OMR SAE A 2B 1" 6B | OMP/OMR SAE A 4B Ø 25 | OMP/OMR SAE A 4B 1" 6B | |
| | | | code | X3 | code | code | code | code | X3 |
| RR210T | RF | 70 | 154-2832M1 | 291 (M...)<br>229.5 (FS)<br>310 (S...) | 154-2858M1 | 154-2858M5 | | | 286.5 (M...)<br>225 (FS)<br>305.5 (S...) |
| | | 140 | 154-2833M1 | | 154-2859M1 | 154-2859M5 | | | |
| | | 210 | 154-2834M1 | | 154-2860M1 | 154-2860M5 | | | |
| | | 320 | 154-2836M1 | | 154-2861M1 | 154-2861M5 | | | |
| | | 430 | 154-2837M1 | | 154-2862M1 | 154-2862M5 | | | |
| | | 600 | 154B8959M1 | | 154B9663M1 | 154B9663M5 | | | |
| RR210Q | RF | 70 | 154-2832M3 | 313 (M...)<br>251.5 (FS)<br>332 (S...) | 154-2858M3 | 154-2858M7 | | | 308.5 (M...)<br>247.5 (FS)<br>327.5 (S...) |
| | | 140 | 154-2833M3 | | 154-2859M3 | 154-2859M7 | | | |
| | | 210 | 154-2834M3 | | 154-2860M3 | 154-2860M7 | | | |
| | | 320 | 154-2836M3 | | 154-2861M3 | 154-2861M7 | | | |
| | | 430 | 154-2837M3 | | 154-2862M3 | 154-2862M7 | | | |
| | | 600 | 154B8959M3 | | 154B9663M3 | 154B9663M7 | | | |

| | CFG 1 | $T_f$ [Nm] | CFG 2 | | | | | | |
|---|---|---|---|---|---|---|---|---|---|
| | | | B | | OMP/OMR SAE A 2B Ø 25 | OMP/OMR SAE A 2B 1" 6B | OMP/OMR SAE A 4B Ø 25 | OMP/OMR SAE A 4B 1" 6B | |
| | | | code | X4 | code | code | code | code | X4 |
| RA210 | RF | 70 | 154-2838M12 | 223.8 | 154-2863M12 | 154-2863M13 | 154-2635M12 | | 213.8 |
| | | 140 | 154-2839M12 | | 154-2864M12 | 154-2864M13 | 154-2636M12 | | |
| | | 210 | 154-2840M12 | | 154-2865M12 | 154-2865M13 | 154-2637M12 | | |
| | | 320 | 154-2841M12 | | 154-2866M12 | 154-2866M13 | 154-2638M12 | | |
| | | 430 | 154-2842M12 | | 154-2867M12 | 154-2867M13 | 154-2639M12 | | |
| | | 600 | 154B8962M12 | | 154B9665M12 | 154B9665M13 | 154B9666M12 | | |
| RA210D | RF | 70 | 154-2838M12 | 223.8 | 154-2863M12 | 154-2863M13 | 154-2635M12 | | 213.8 |
| | | 140 | 154-2839M12 | | 154-2864M12 | 154-2864M13 | 154-2636M12 | | |
| | | 210 | 154-2840M12 | | 154-2865M12 | 154-2865M13 | 154-2637M12 | | |
| | | 320 | 154-2841M12 | | 154-2866M12 | 154-2866M13 | 154-2638M12 | | |
| | | 430 | 154-2842M12 | | 154-2867M12 | 154-2867M13 | 154-2639M12 | | |
| | | 600 | 154B8962M12 | | 154B9665M12 | 154B9665M13 | 154B9666M12 | | |

12

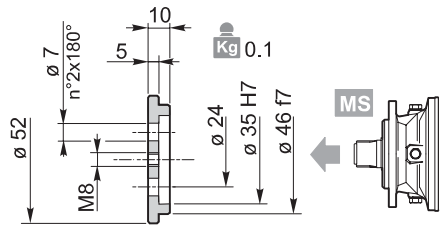


154-3063

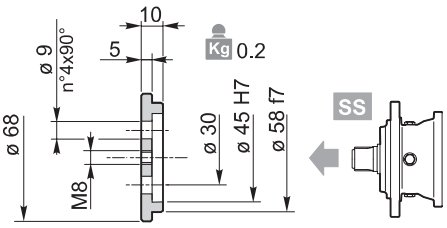


154-3061

Materiale / *Material* / Material / Matériau / *Material* / Material:
**Acciaio / *Steel* / Stahl / Acier / *Acero* / Aço**
**C40 EN 10083-1 (1.1186)**

28

Materiale / *Material* / Material / Matériau / *Material* / Material:
**Acciaio / *Steel* / Stahl / Acier / *Acero* / Aço EN 10083-1-C40 (1.1186)**

154-3113

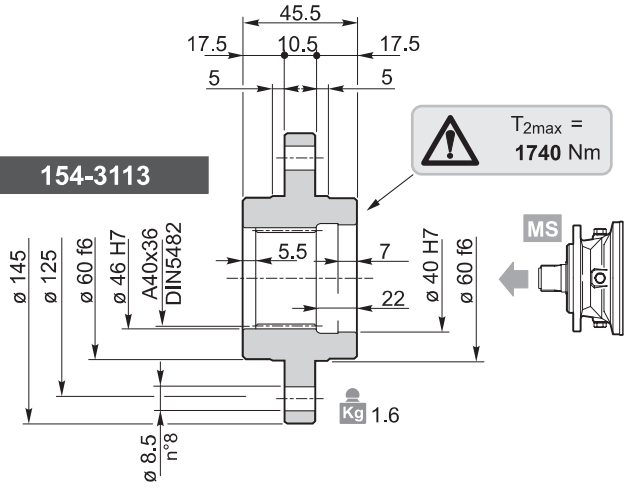


154-3086

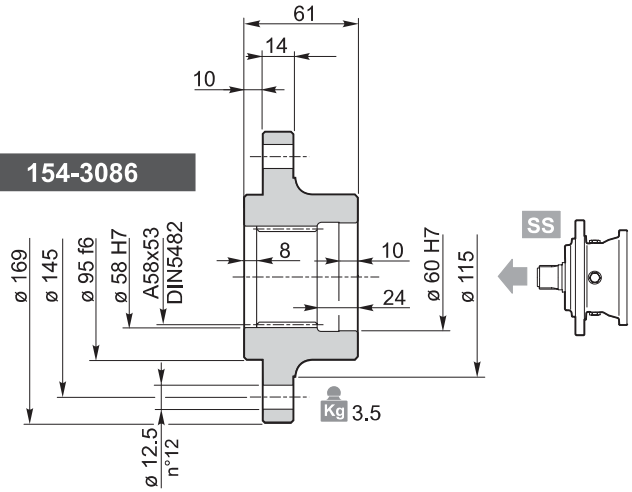


154-3087

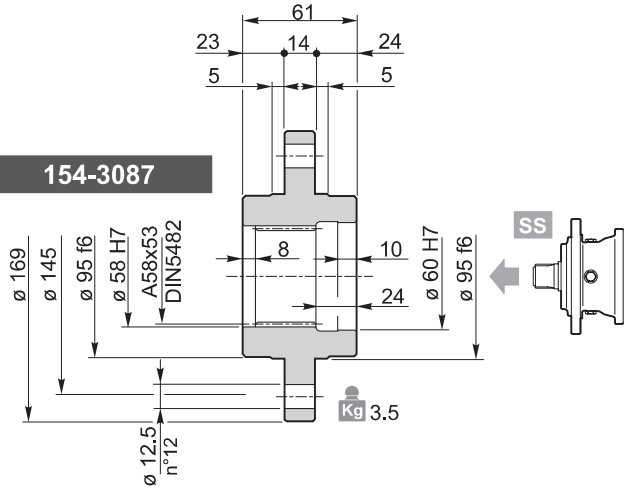


29

Materiale / *Material* / Material / Matériau / *Material* / Material:
**Acciaio / *Steel* / Stahl / Acier / *Acero* / Aço 39NiCrMo3 UNI 7845 (1.6511)**

154-3094

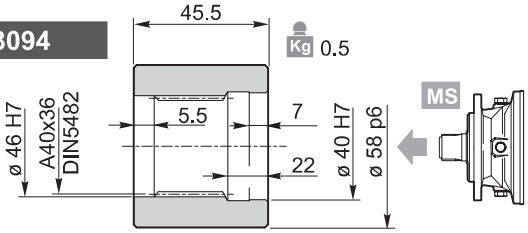


154-3091

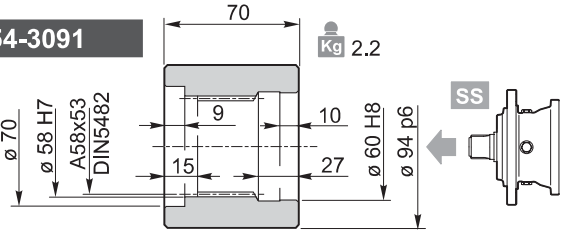

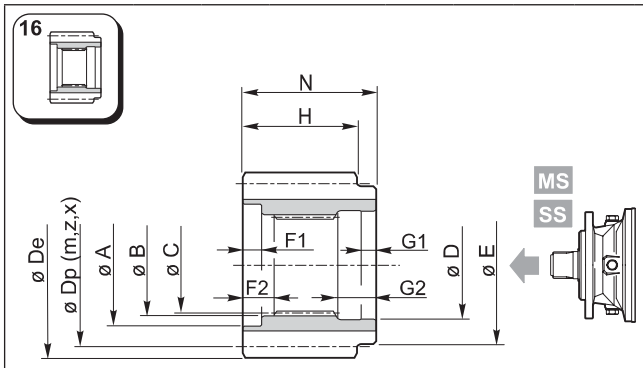


Materiale / *Material* / Material
Matériau / *Material* / Material
**Acciaio / *Steel* / Stahl / Acier / *Acero* / Aço**
**39NiCrMo3 UNI 7845 (1.6511)**

| | A | B | C | D | E | F1 | F2 | G1 | G2 | N | m | z | x | H | Dp | De | Code |
|---|---|---|---|---|---|---|---|---|---|---|---|---|---|---|---|---|---|
| MS | 53 | 46 F6 | DIN5482 A40x36 | 40 F6 | 50 | 2 | 7.5 | 7 | 21 | 47.5 | 4 | 15 | 0.5 | 44.5 | 60 | 69.8 | 154-3072 |
| | 53 | 46 F6 | DIN5482 A40x36 | 40 F6 | 50 | 2 | 7.5 | 7 | 21 | 47.5 | 4 | 32 | 0 | 44.5 | 128 | 135 | 154-3104 |
| | 53 | 46 F6 | DIN5482 A40x36 | 40 F6 | 50 | 2 | 7.5 | 7 | 21 | 47.5 | 6 | 12 | 0.25 | 44.5 | 72 | 84.8 | 154-3073 |
| | 53 | 46 F6 | DIN5482 A40x36 | 40 F6 | 50 | 2 | 7.5 | 7 | 21 | 47.5 | 5 | 14 | 0.5 | 44.5 | 70 | 84 | 154-2709 |
| | 53 | 46 F6 | DIN5482 A40x36 | 40 F6 | 50 | 2 | 7.5 | 7 | 21 | 47.5 | 6 | 24 | 0 | 44.5 | 144 | 154 | 154-2285 |
| | 53 | 46 F6 | DIN5482 A40x36 | 40 F6 | 50 | 2 | 7.5 | 7 | 21 | 47.5 | 8 | 16 | 0.25 | 44.5 | 128 | 145 | 154-2707 |
| SS | 70 | 58 H7 | DIN5482 A58x53 | 60 H7 | 72 | 7 | 13 | 12 | 27 | 68 | 4.5 | 18 | 0.4444 | 65 | 81 | 93 | 154-3106 |
| | 70 | 58 H7 | DIN5482 A58x53 | 60 H7 | 68 | 7 | 13 | 10 | 27 | 68 | 5 | 17 | 0.4 | 65 | 85 | 98 | 154-2287 |
| | 70 | 58 H7 | DIN5482 A58x53 | 60 H7 | 68 | 7 | 13 | 10 | 27 | 68 | 5 | 19 | 0 | 65 | 95 | 104 | 154-2286 |
| | 70 | 58 H7 | DIN5482 A58x53 | 60 H7 | 75 | 7 | 13 | 12 | 27 | 68 | 6 | 14 | 0.5 | 65 | 84 | 101.5 | 154-3082 |
| | 70 | 58 H7 | DIN5482 A58x53 | 60 H7 | 68 | 7 | 13 | 10 | 27 | 68 | 6 | 15 | 0.25 | 65 | 90 | 103 | 154-3107 |
| | 70 | 58 H7 | DIN5482 A58x53 | 60 H7 | 68 | 7 | 13 | 10 | 27 | 68 | 6 | 16 | 0.25 | 65 | 96 | 109 | 154-3245 |
| | 70 | 58 H7 | DIN5482 A58x53 | 60 H7 | 78 | 7 | 13 | 12 | 27 | 68 | 8 | 12 | 0.5 | 65 | 96 | 118 | 154-3074 |
| | 70 | 58 H7 | DIN5482 A58x53 | 60 H7 | 68 | 7 | 13 | 10 | 27 | 68 | 8 | 14 | 0 | 65 | 112 | 126 | 154-3250 |
| | 70 | 58 H7 | DIN5482 A58x53 | 60 H7 | 78 | 7 | 13 | 12 | 27 | 68 | 8 | 15 | 0 | 65 | 120 | 136 | 154-3246 |
| | 70 | 58 H7 | DIN5482 A58x53 | 60 H7 | 68 | 7 | 13 | 10 | 27 | 68 | 8 | 15 | 0.25 | 65 | 120 | 138 | 154-3235 |
| | 70 | 58 H7 | DIN5482 A58x53 | 60 H7 | 78 | 7 | 13 | 12 | 27 | 68 | 8 | 18 | 0 | 65 | 144 | 158 | 154-3103 |
| | 70 | 58 H7 | DIN5482 A58x53 | 60 H7 | 78 | 7 | 13 | 12 | 27 | 68 | 10 | 10 | 0.25 | 65 | 100 | 124.5 | 154-3075 |
| | 70 | 58 H7 | DIN5482 A58x53 | 60 H7 | 78 | 7 | 13 | 12 | 27 | 68 | 10 | 12 | 0.475 | 65 | 120 | 149.5 | 154-3105 |
| | 70 | 58 H7 | DIN5482 A58x53 | 60 H7 | 68 | 7 | 13 | 10 | 27 | 68 | 10 | 15 | 0 | 65 | 150 | 167 | 154-3248 |

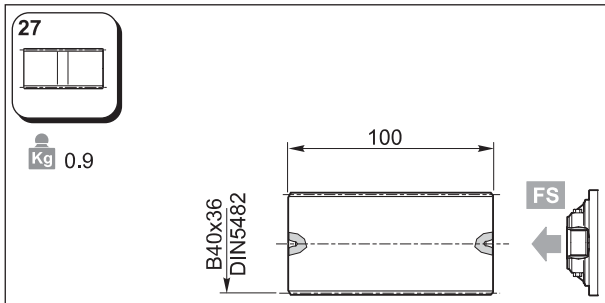


Materiale / Materiale / Material
Matériau / *Material* / Material:
**Acciaio / *Steel* / Stahl / Acier / *Acero* / Aço**
**39NiCrMo3 UNI 7845 (1.6511)**

**154-3050**

| RR RA | 210 | .. | MS MC |
|---|---|---|---|

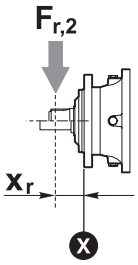


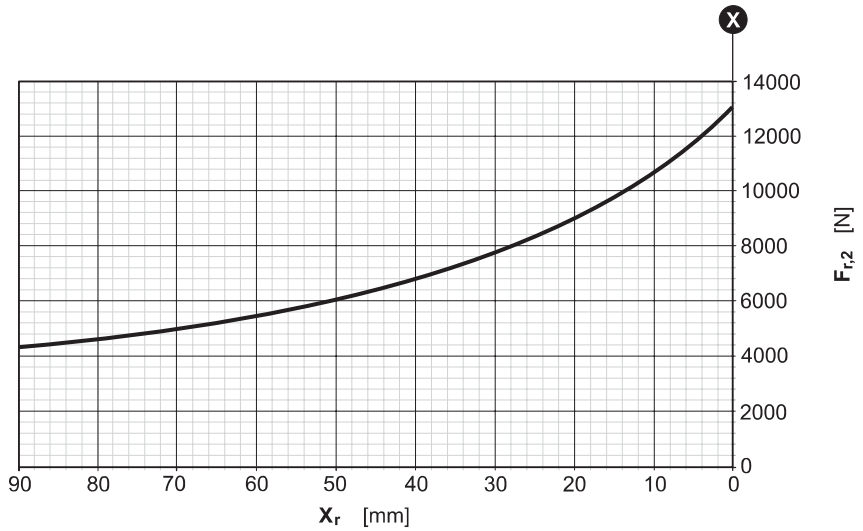


| RR RA | 210 | .. | SS SC |
|---|---|---|---|

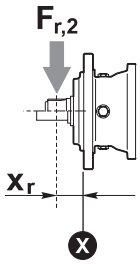


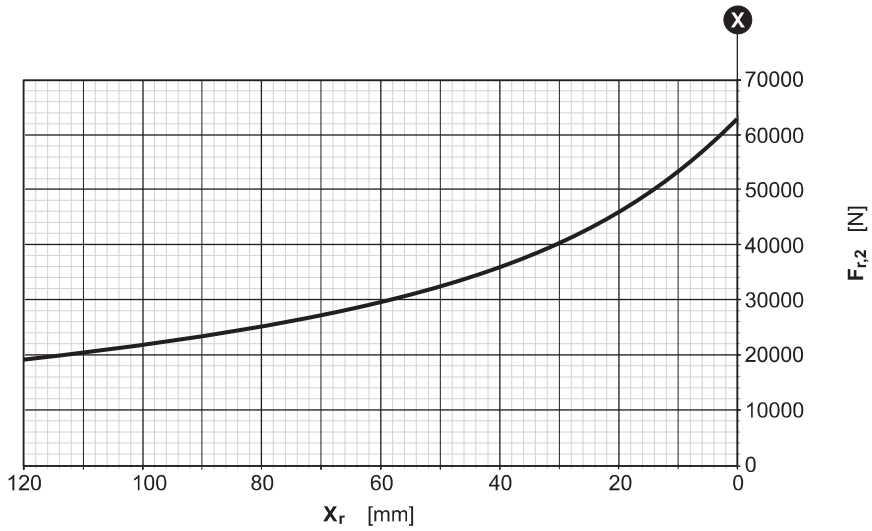

| RR RA | 210 | .. | UC |
|---|---|---|---|

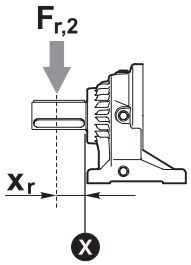


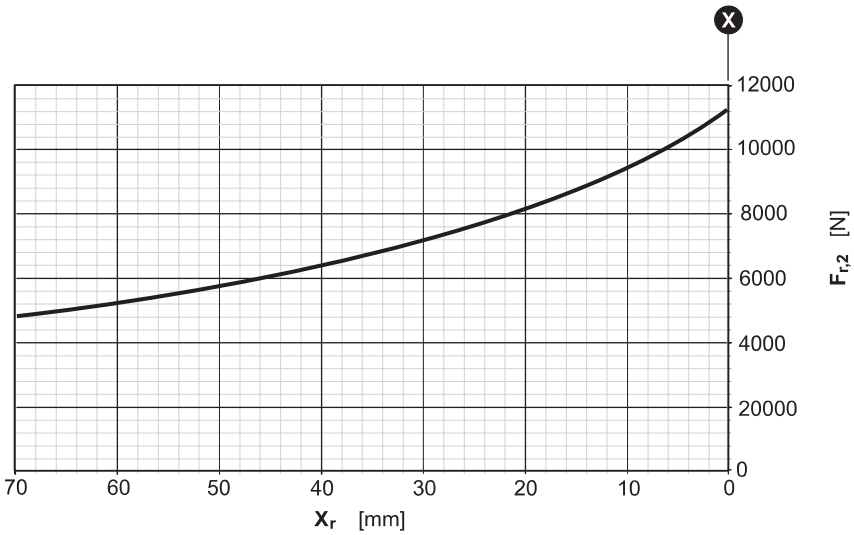

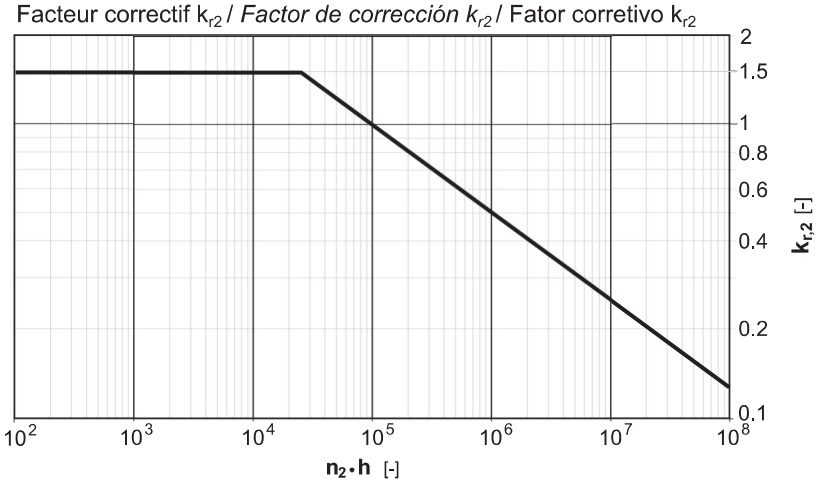
Fattore correttivo $k_{r2}$ / *$k_{r2}$ Corrective coefficient* / Korrekturfaktor $k_{r2}$
Facteur correctif $k_{r2}$ / *Factor de corrección $k_{r2}$* / Fator corretivo $k_{r2}$