RR15000	L..	..	i

	i	T_2 [Nm]						n_{1max}	T_{2max}	P_t
		n_2 x h								
	1/…	**10000** (10^4)	**25000** ($2.5 \cdot 10^4$)	**50000** ($5 \cdot 10^4$)	**100000** (10^5)	**500000** ($5 \cdot 10^5$)	**1000000** (10^6)	[min^{-1}]	[Nm]	[kW]
RR15000 L1	**4.17**	171460	158350	154320	143190	102530	83280	500	275000	120
	4.84	156880	143420	128720	122180	100780	81860	500	275000	120
	5.87	134630	114020	102440	98180	88950	80200	500	275000	120
RR15000 L2	**17.42**	171460	158350	154320	143190	94140	76460	1000	275000	72
	20.21	171460	158350	154320	143190	92260	74940	1000	275000	72
	23.45	156880	143420	128720	122180	100780	81860	1000	275000	72
	28.41	156880	143420	128720	122180	100270	81440	1000	275000	72
	34.42	134630	114020	102440	98180	88950	80200	1000	275000	72
RR15000 L3	**67.94**	171460	158350	154320	143190	94140	76460	2000	275000	51
	76.86	171460	158350	154320	143190	94140	76460	2000	275000	51
	89.16	171460	158350	154320	143190	92260	74940	2000	275000	51
	103.94	171460	158350	154320	143190	92260	74940	2000	275000	51
	126.78	151260	142990	137040	131330	92260	74940	2000	275000	51
	147.07	156880	143420	128720	122180	100780	81860	2000	275000	51
	178.19	156880	143420	128720	122180	100270	81440	2000	275000	51
	215.89	134630	114020	102440	98180	88950	80200	2000	275000	51
RR15000 L4	**231.01**	171460	158350	153940	125030	77150	62670	3500	275000	40
	271.78	171460	158350	149220	121210	74790	60750	3500	275000	40
	315.28	171460	158350	154320	134480	82980	67400	3500	275000	40
	356.66	171460	158350	154320	143190	90460	73480	3500	275000	40
	415.76	171460	158350	154320	143190	92260	74940	3500	275000	40
	457.16	171460	158350	154320	130300	80400	65310	3500	275000	40
	519.70	171460	158350	154320	143190	92260	74940	3500	275000	40
	602.85	171460	158350	154320	143190	92260	74940	3500	275000	40
	727.58	160870	152090	145770	140710	92260	74940	3500	275000	40
	887.43	151260	142990	137040	131330	92260	74940	3500	275000	40
	1033.50	156880	143420	128720	122180	100270	81440	3500	275000	40
	1247.33	156880	143420	128720	122180	100270	81440	3500	275000	40
	1511.25	134630	114020	102440	98180	88950	80200	3500	275000	40

RR15000

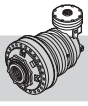

RR15000	A..	..	i

	i	T_2 [Nm]						n_{1max}	T_{2max}	P_t
		n_2 x h								
	1/…	10000 (10^4)	25000 ($2.5 \cdot 10^4$)	50000 ($5 \cdot 10^4$)	100000 (10^5)	500000 ($5 \cdot 10^5$)	1000000 (10^6)	[min^{-1}]	[Nm]	[kW]
RR15000 A3 (A)	**47.51**	90690	68900	55960	45460	28050	22780	2500	249730	55
	55.12	100630	76440	62090	50430	31120	25280	2500	275000	55
	63.94	111650	84820	68890	55960	34530	28050	2500	275000	55
	77.47	127710	97010	78800	64010	39490	32080	2500	275000	55
	93.87	134630	110970	90130	73210	45170	36690	2500	275000	55
	113.58	134630	106830	86780	70480	43490	35330	2500	275000	55
	133.85	132740	100840	81910	66530	41050	33340	2500	275000	55
(B)	**48.24**	107700	81810	66450	53980	33310	27050	2500	275000	59
	55.97	119490	90770	73730	59890	36950	30020	2500	275000	59
	64.93	132580	100720	81810	66450	41000	33300	2500	275000	59
	78.67	151650	115200	93570	76000	46900	38090	2500	275000	59
	95.31	134630	114020	102440	86930	53640	43570	2500	275000	59
	108.99	134630	114020	102440	88030	54320	44120	2500	275000	59
	140.80	134630	114020	102440	87500	53990	43850	2500	275000	59
(C)	**42.88**	171460	158350	140770	114340	70550	57310	2000	275000	67
	49.75	171460	158350	154320	126870	78280	63580	2000	275000	67
	57.71	156880	143420	128720	122180	86860	70550	2000	275000	67
	69.92	156880	143420	128720	122180	99350	80690	2000	275000	67
	74.25	156880	143420	128720	122180	86780	70490	2000	275000	67
	89.96	156880	143420	128720	122180	99260	80620	2000	275000	67
	108.46	156880	143420	128720	122180	97980	79590	2000	275000	67
	131.41	134630	114020	102440	98180	88950	80200	2000	275000	67
RR15000 A4 (A)	**182.93**	93880	71320	57930	47050	29030	23580	3500	275000	42
	206.93	102340	77750	63150	51290	31650	25710	3500	275000	42
	240.06	113550	86260	70070	56910	35120	28520	3500	275000	42
	279.84	126420	96040	78000	63360	39100	31760	3500	275000	42
	341.32	145270	110360	89640	72810	44930	36490	3500	275000	42
	395.96	156880	122450	99460	80790	49850	40490	3500	275000	42
	479.74	156880	140060	113760	92400	57020	46310	3500	275000	42
	581.25	134630	114020	102440	98180	65210	52970	3500	275000	42
	680.89	134630	114020	102440	98180	64230	52170	3500	275000	42
	712.76	156880	132140	107340	87180	53790	43700	3500	275000	42
	863.57	134630	114020	102440	98180	61530	49980	3500	275000	42
(B)	**185.30**	171460	158350	141460	114900	70900	57590	2500	275000	46
	209.62	171460	158350	154210	125260	77290	62780	2500	275000	46
	243.17	171460	158350	154320	138980	85760	69660	2500	275000	46
	283.47	171460	158350	154320	143190	92260	74940	2500	275000	46
	343.00	171460	158350	154320	143190	91920	74660	2500	275000	46
	418.36	151260	142990	137040	131330	92260	74940	2500	275000	46
	493.01	151260	142990	137040	131330	92260	74940	2500	275000	46
	588.03	156880	143420	128720	122180	100270	81440	2500	275000	46
	692.96	156880	143420	128720	122180	100270	81440	2500	275000	46
	839.59	134630	114020	102440	98180	88950	80200	2500	275000	46
(C)	**188.15**	171460	158350	154320	136440	84190	68380	2500	275000	47
	212.84	171460	158350	154320	143190	91780	74550	2500	275000	47
	246.92	171460	158350	154320	143190	92260	74940	2500	275000	47
	282.35	171460	158350	154320	143190	92260	74940	2500	275000	47
	329.14	171460	158350	154320	143190	92260	74940	2500	275000	47
	364.76	171460	158350	154320	143190	92260	74940	2500	275000	47
	425.21	171460	158350	154320	143190	92260	74940	2500	275000	47
	518.63	151260	142990	137040	131330	92260	74940	2500	275000	47
	601.65	156880	143420	128720	122180	100780	81860	2500	275000	47
	728.96	156880	143420	128720	122180	100270	81440	2500	275000	47
	883.20	134630	114020	102440	98180	88950	80200	2500	275000	47

RR15000	L..	..	i

L1

344.5 RR15000 **L1**

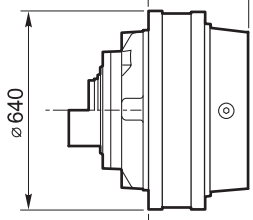

L2

549.5 RR15000 **L2**

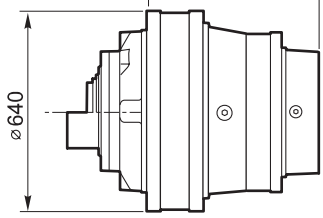

L3

664.5 RR15000 **L3**

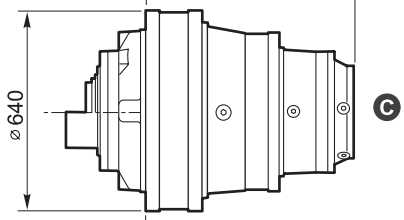

L4

740.5 RR15000 **L4**

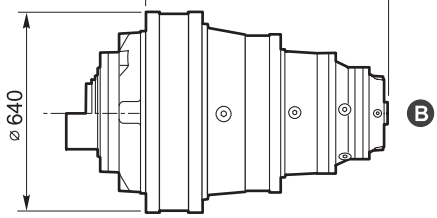

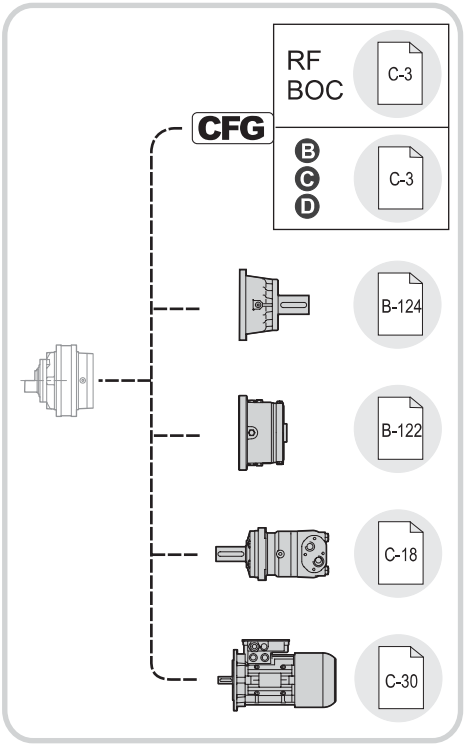

RR15000

RR15000	A..	..	i

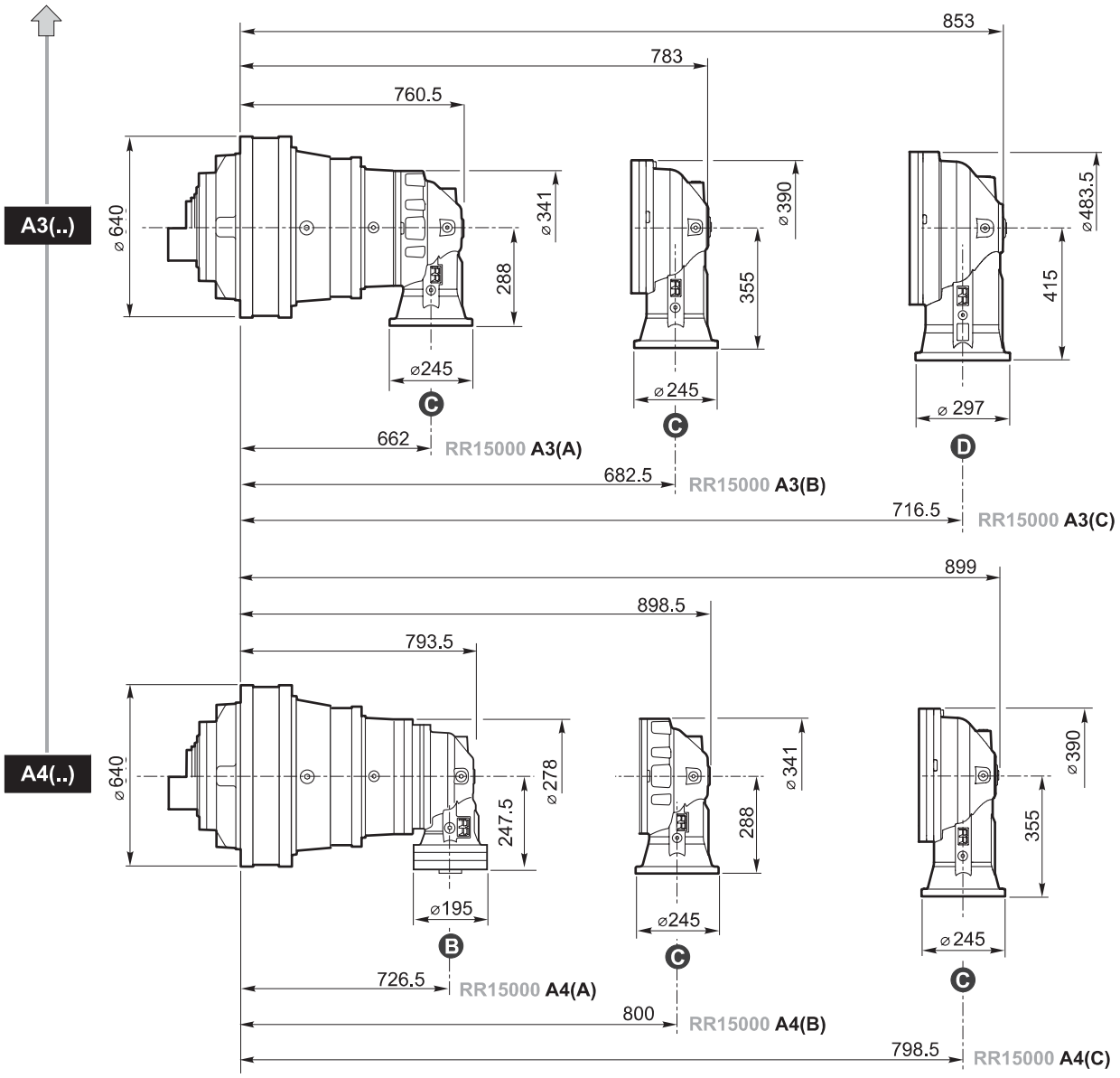

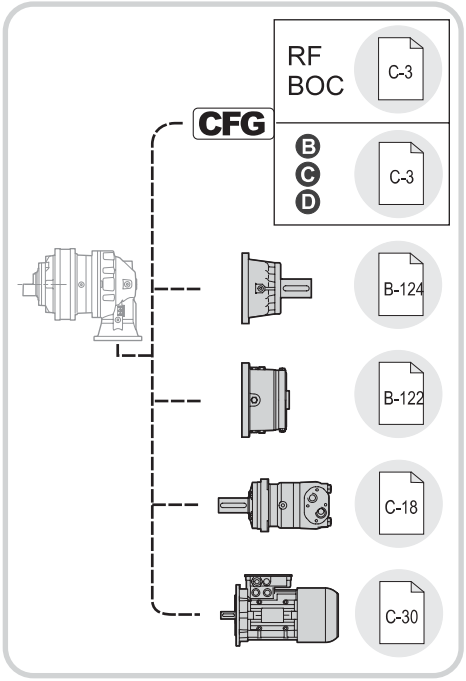

RR15000	L..	FS	i
RR15000	A..		i

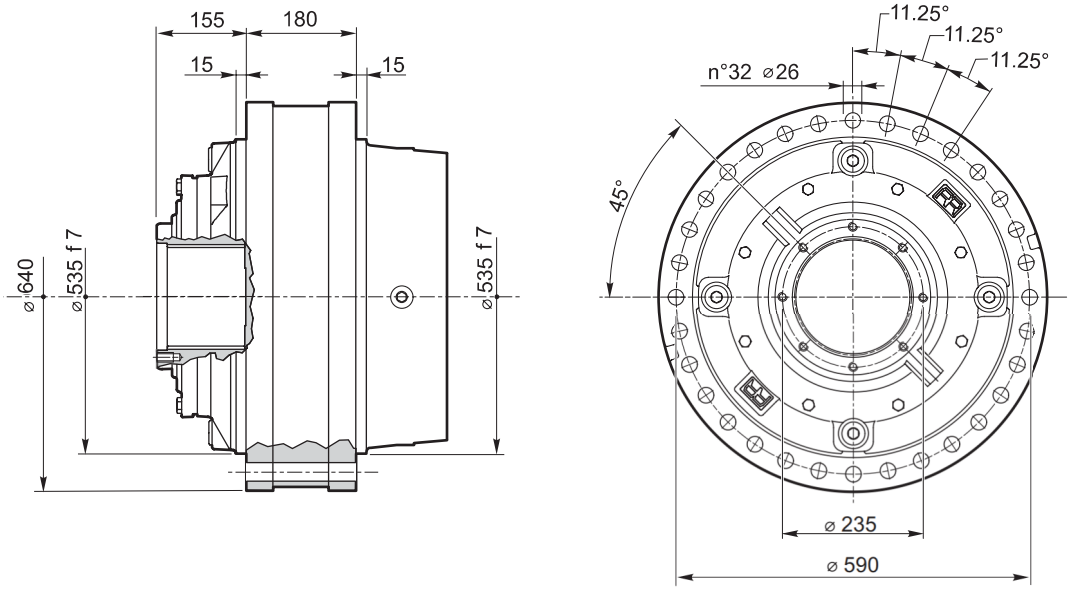

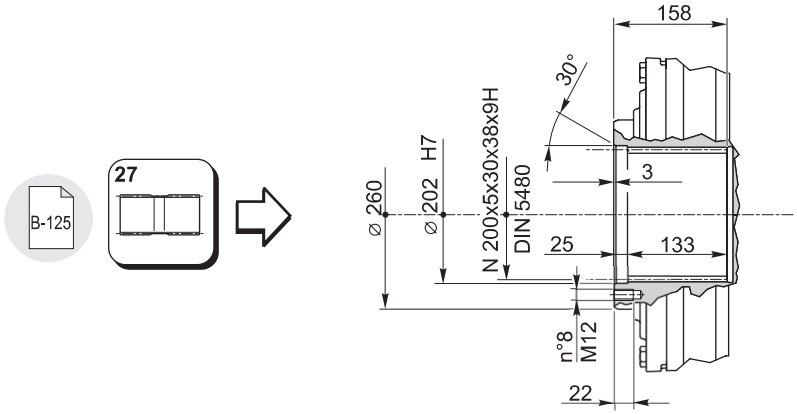

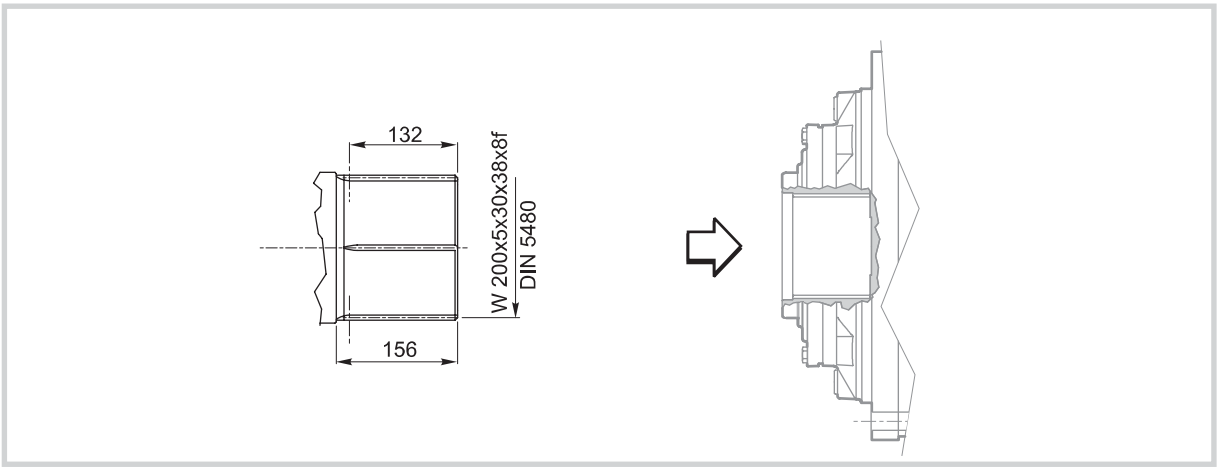

RR15000

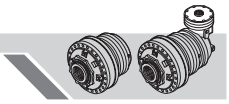

RR15000	L..	MH	i
RR15000	A..		i

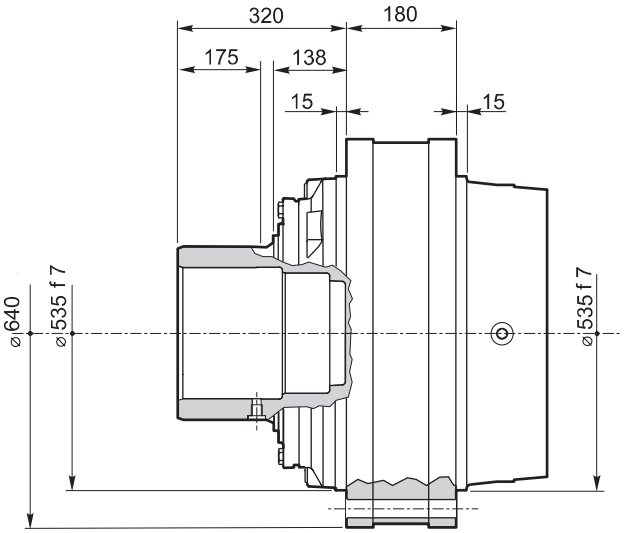

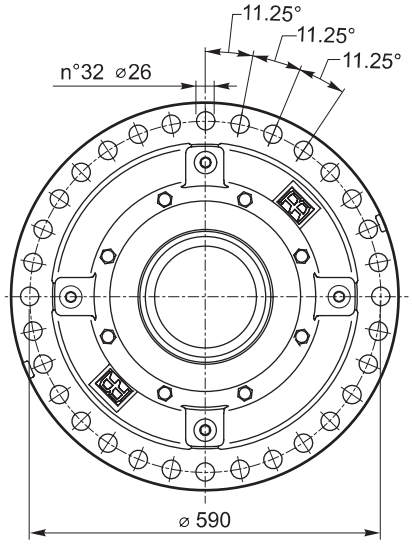

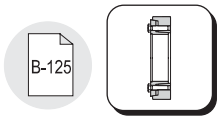

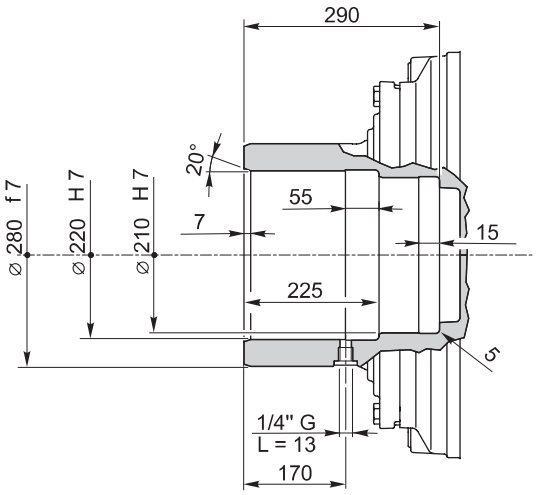

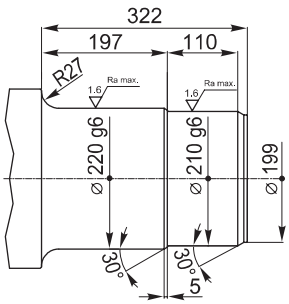

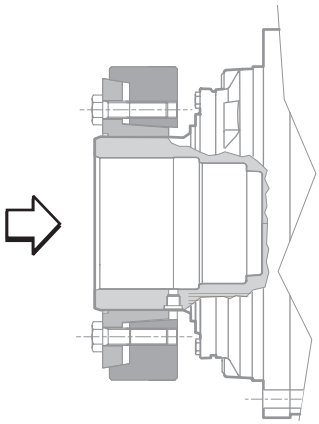

RR15000

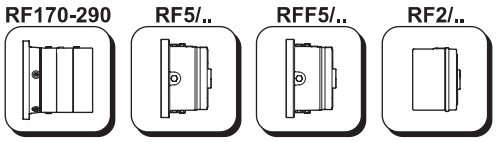

C-11

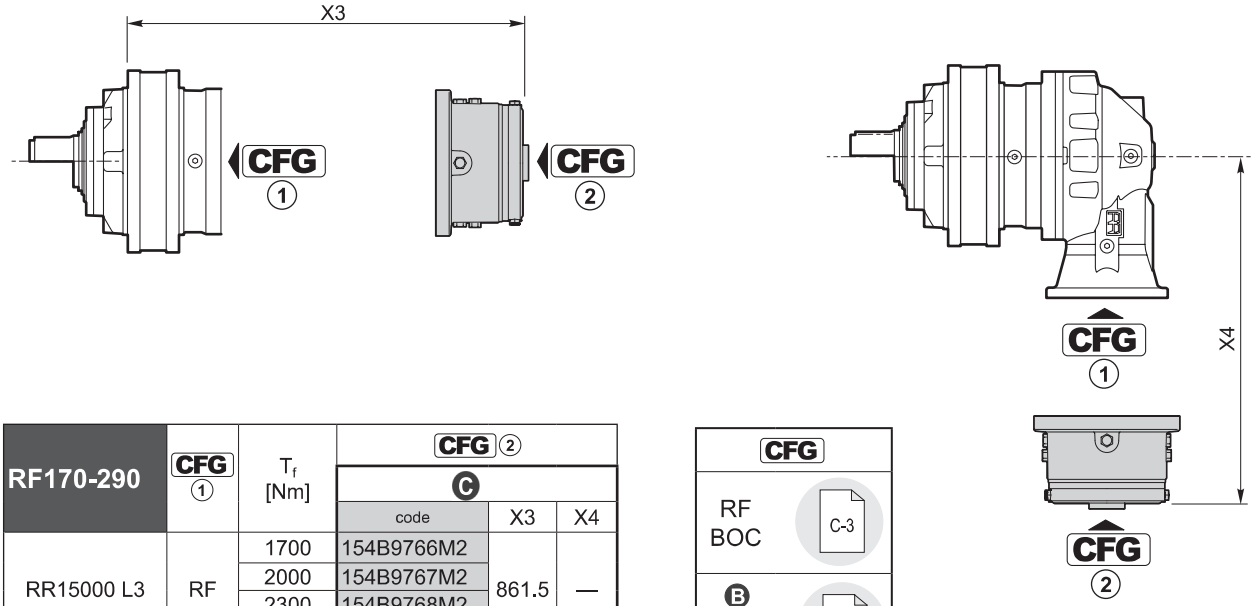

RF170-290	CFG 1	T_f [Nm]	CFG 2 C code	X3	X4
RR15000 L3	RF	1700	154B9766M2	861.5	—
		2000	154B9767M2		
		2300	154B9768M2		
		2900	154B9769M2		
RR15000 A3(A)	—	1700	154B9766M3	—	485
		2000	154B9767M3		
		2300	154B9768M3		
		2900	154B9769M3		
RR15000 A3(B)	—	1700	154B9766M3	—	552
		2000	154B9767M3		
		2300	154B9768M3		
		2900	154B9769M3		
RR15000 A4(B)	—	1700	154B9766M3	—	485
		2000	154B9767M3		
		2300	154B9768M3		
		2900	154B9769M3		
RR15000 A4(C)	—	1700	154B9766M3	—	552
		2000	154B9767M3		
		2300	154B9768M3		
		2900	154B9769M3		

CFG	
RF BOC	C-3
B C D	C-3

RF5/..	CFG 1	T_f [Nm]	CFG 2 B code	X3	X4	OMTS 12/24 z16 code	OMVS 10/20 z16 code	X3	X4
RR15000 L4	RF	210	154-2872	830.8	—	154-2879	154-2886	834.5	—
		290	154-2873			154-2880	154-2887		
		430	154-2874			154-2881	154-2888		
		650	154-2875			154-2882	154-2889		
		850	154-2876			154-2883	154-2890		
		1100	154-2877			154-2884	154-2891		
		1300	154-2878			154-2885	154-2892		

RR15000

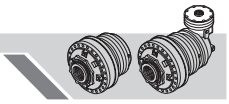

RFF5/..	CFG ①	T_f [Nm]	CFG ②						
			Ⓑ			OMTS 12/24 z16	OMVS 10/20 z16		
			code	X3	X4	code	code	X3	X4
RR15000 A4(A)	RF	210	154-2893	—	316.6	154-5338	154-5345	—	320.5
		290	154-2894			154-5339	154-5346		
		430	154-2895			154-5340	154-5347		
		650	154-2896			154-5341	154-5348		
		850	154-2897			154-5342	154-5349		
		1100	154-2898			154-5343	154-5350		
		1300	154-2899			154-5344	154-5351		

CFG	
RF	C-3
Ⓑ Ⓒ Ⓓ	C-3

RF2/..	CFG ①	T_f [Nm]	CFG ②								
			Ⓑ			OMP/OMR SAE A 2B Ø 25	OMP/OMR SAE A 2B 1” 6B	OMP/OMR SAE A 4B Ø 25	OMP/OMR SAE A 4B 1” 6B		
			code	X3	X4	code	code	code	code	X3	X4
RR15000 L4	RF	70	154B9195	803.3	—	154B9195M10	—	154B9195M16	154B9195M17	793.3	—
		140	154B9196			154B9196M10	—	154B9196M16	154B9196M17		
		210	154B9197			154B9197M10	—	154B9197M16	154B9197M17		
		320	154B9198			154B9198M10	—	154B9198M16	154B9198M17		
		430	154B9199			154B9199M10	—	154B9199M16	154B9199M17		
		600	154B9200			154B9200M10	—	154B9200M16	154B9200M17		
RR15000 A4(A)	RF	70	154F2991	—	285.3						
		140	154F1890								
		210	154F2961								
		320	154B3591								
		430	154B3592								
		600	154F2992								

RR15000

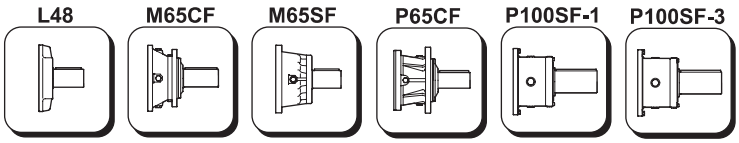

C-9

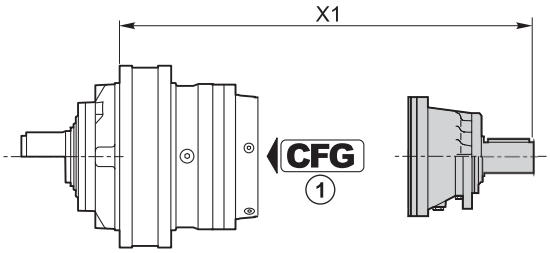

	CFG 1		code	X1
RR15000 L2	—	**P100SF-3**	154F3324	926.5
RR15000 L3	—	**P65CF**	154-2404	976.5
RR15000 L4	RF	**M65SF**	154B4249	925
	RF	**M65CF**	154-2407	948
	BOC	**L48**	154B3989	861.8

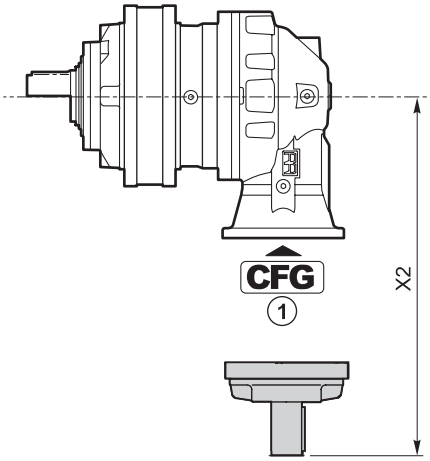

	CFG 1		code	X2
RR15000 A3(A)	—	**P65CF**	154-2404	600
RR15000 A3(B)	—	**P65CF**	154-2404	667
RR15000 A3(C)	—	**P100SF-1**	154F3322	791.5
RR15000 A4(A)	BOC	**L48**	154B3989	347.8
RR15000 A4(B)	—	**P65CF**	154-2404	600
RR15000 A4(C)	—	**P65CF**	154-2404	667

CFG	
RF BOC	C-3
B C D	C-3

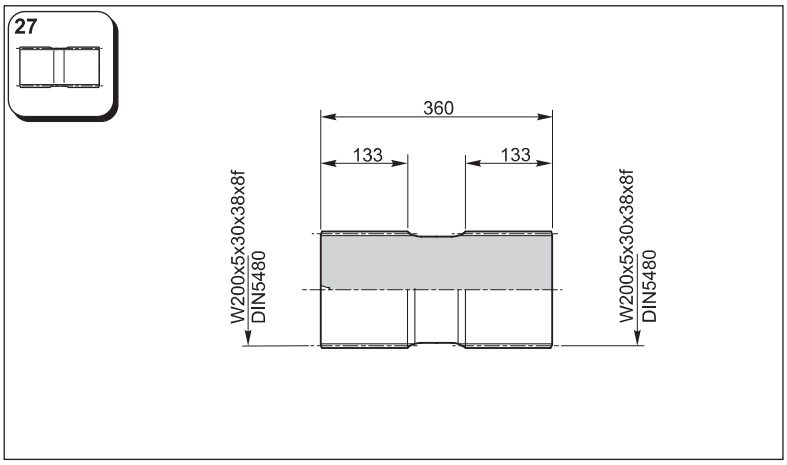

154F6041

Materiale / *Material* / Material / Matériau / *Material* / Material:
Acciaio / *Steel* / Stahl / Acier / *Acero* / Aço
EN 10083-1-42CrMo4+QT (1.7225)

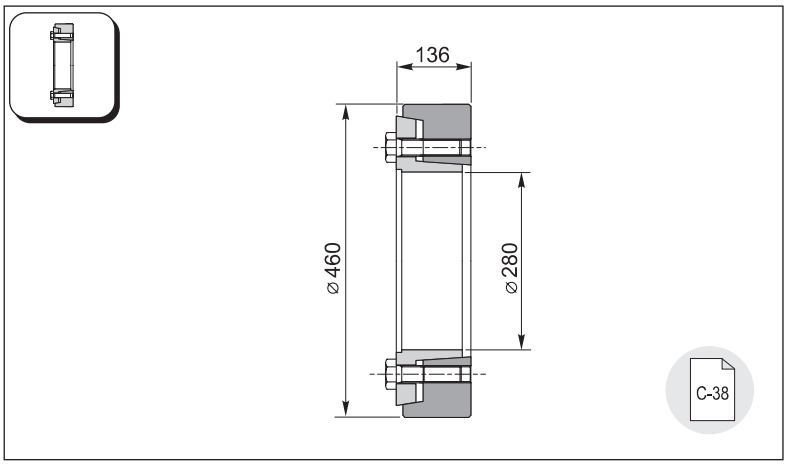

154F6069