OPERATION

This is an in-line flow limiter that closes and then provides non-compensated restricted flow when the specified flow setting is exceeded. The valve provides free reverse flow when operated in the opposite direction.

SPECIFICATIONS

Schematic

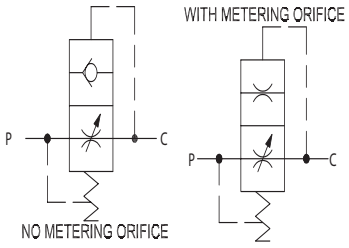

Theoretical performance

Pressure drop from P ⇒ C according to Adjustment H
26 cSt [121 SUS] hyd.oil at 50°C [122 °F]

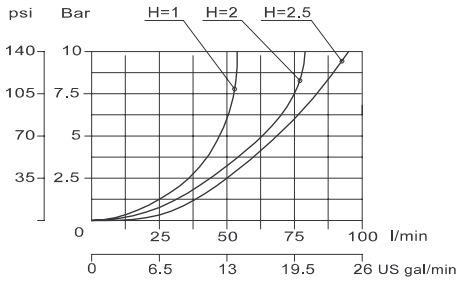

Specifications

Pressure rating	210 bar 3000 psi
Rated Free Flow at 7 bar 100 psi	85 l/min 30 US gal/min
Cavity	Consult factory

Values for adjustment H are guideline only, being conditioned by a variety of factors (oil temperature and viscosity, volume and flexibility of circuits).

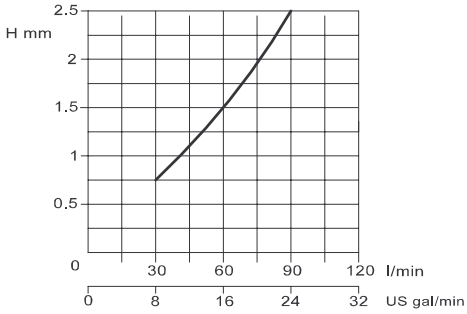

DIMENSIONS

mm in

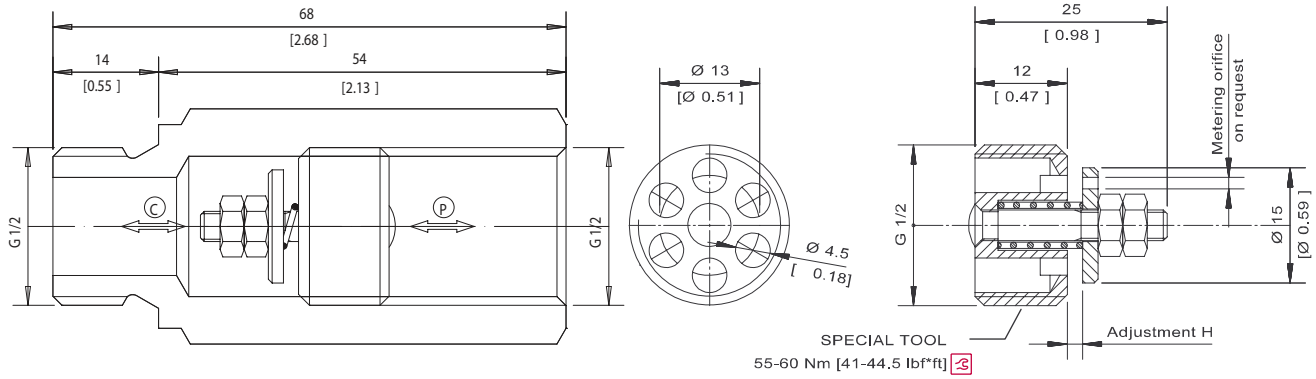

ORDERING INFORMATION

BC 13 - 1.0 - G - 00 - S1.5

Adjustment H
- 00 = No factory adjustment
- 0.25 = 0.25 mm [in]
- 0.5 = 0.5 mm [in]
- 1.0 = 1.0 mm [in]
- 1.5 = 1.5mm
- 2.0 = 2.0mm

Metering orifice
- Omit = No orifice
- S0.5 = 0.5 mm [in]
- S0.7 = 0.7 mm [in]
- S1.0 = 1.0 mm [in]
- S1.5 = 1.5 mm [in]
- S2.0 = 2.0 mm [in]

Coupling
- 00 = Cartridge only
- L = 3/8 BSP